BILLY GOAT ® BC2600 Hydro Series Brush Cutter Owner's Manual

CONTENTS

Specifications and Sound/Vibration 3
Instruction Labels 4
Assembly Instructions 5-6
Operation 7-9
Maintenance 10-16
Battery maintenance 17
Troubleshooting 18
Illustrated Parts List 19-26

Go to http://www.billygoat.com for French-Canadian translations of the product manuals.

Visitez http://www.billygoat.com pour la version canadienne-française des manuels de produits

BC 2600 SERIES SPECIFICATIONS

	BC2600ICH	BC2600HH	BC2600HEBH
Engine Type	Briggs and Stratton	Honda GX390	Honda Electric
Model Number	219972 0151 F!	GX390UT2 DABG	V390UTDE33
Displacement	344 cc	390 cc	390 cc
Fuel Capacity	3.0 qt (2.80 L)	3.0 qt (2.80 L)	2.3 qt (2.18L)
Oil Capacity	1.5 qt (1.4L)	1.5 qt (1.4L)	1.2 qt (1.13L)
Unit Weight	325 lb (147.4 kg)	325 lb (147.4 kg)	335 lb (152 kg)
Overall Length	72 in (1.83 m)		
Overall Width	31 in (0.78 m)		
Overall Height	48 in (1.21 m)		
Maximum Operating Slope	15°	20°	20°

SOUND DATA

L_{WA} SOUND LEVEL 91.6 Dba at Operator's position

112 dB

Sound tests were conducted in accordance with 2000/14/EEC and were performed on 11/30/11 under the conditions listed below.

NOTE Sound power level listed is the highest value for any model covered in this manual. Please refer to serial plate on the unit for the sound power level for your model.

General Conditions:	Sunny
Temperature:	47°F (8.3°C)
Wind Speed:	9 mph (14.5 kph)
Wind Direction:	South
Humidity:	25%
Barometric Pressure:	30.07" Hg (101.83 kPa)

VIBRATION DATA

VIBRATION LEVEL .3g (3.13 m/s^2)

Vibration levels at the operator's handles were measured in the vertical, lateral and longitudinal directions using calibrated vibration test equipment. Tests were performed on 11/30/11 under the conditions listed below.

General Conditions:	Sunny
Temperature:	47°F (8.3°C)
Wind Speed:	9 mph (14.5 kph)
Wind Direction:	South
Humidity:	25%
Barometric Pressure:	30.07" Hg (101.83 kPa)

INSTRUCTION LABELS

The labels shown below were installed on your BILLY GOAT ® Hydro Brush Cutter. If any labels are damaged or missing, replace them before operating this equipment. Item numbers from the Illustrated Parts List and part numbers are provided for convenience in ordering replacement labels. The correct position for each label may be determined by referring to the Figure and Item numbers shown.

PN 100261
(Item 61)

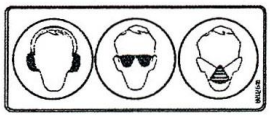

PN 890254
(Item 134)

PN 501502
(Item 85)

PN 400424
(Item 5)

PN 810736
(Item 136)

PN 890301
(Item 133)

PN 900327
(Item 20)

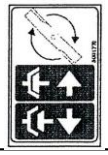

PN 500177
(Item 135)

PN 501504
(Item 139)

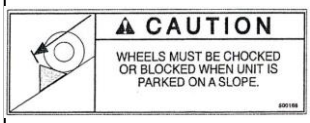

PN 500168
(Item 140)

PN 100256
(Item 62)

ENGINE LABELS

Honda

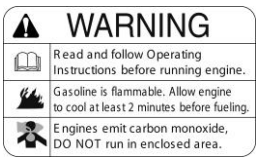

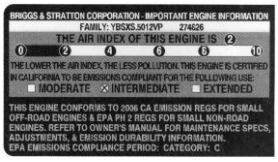

Briggs and Stratton

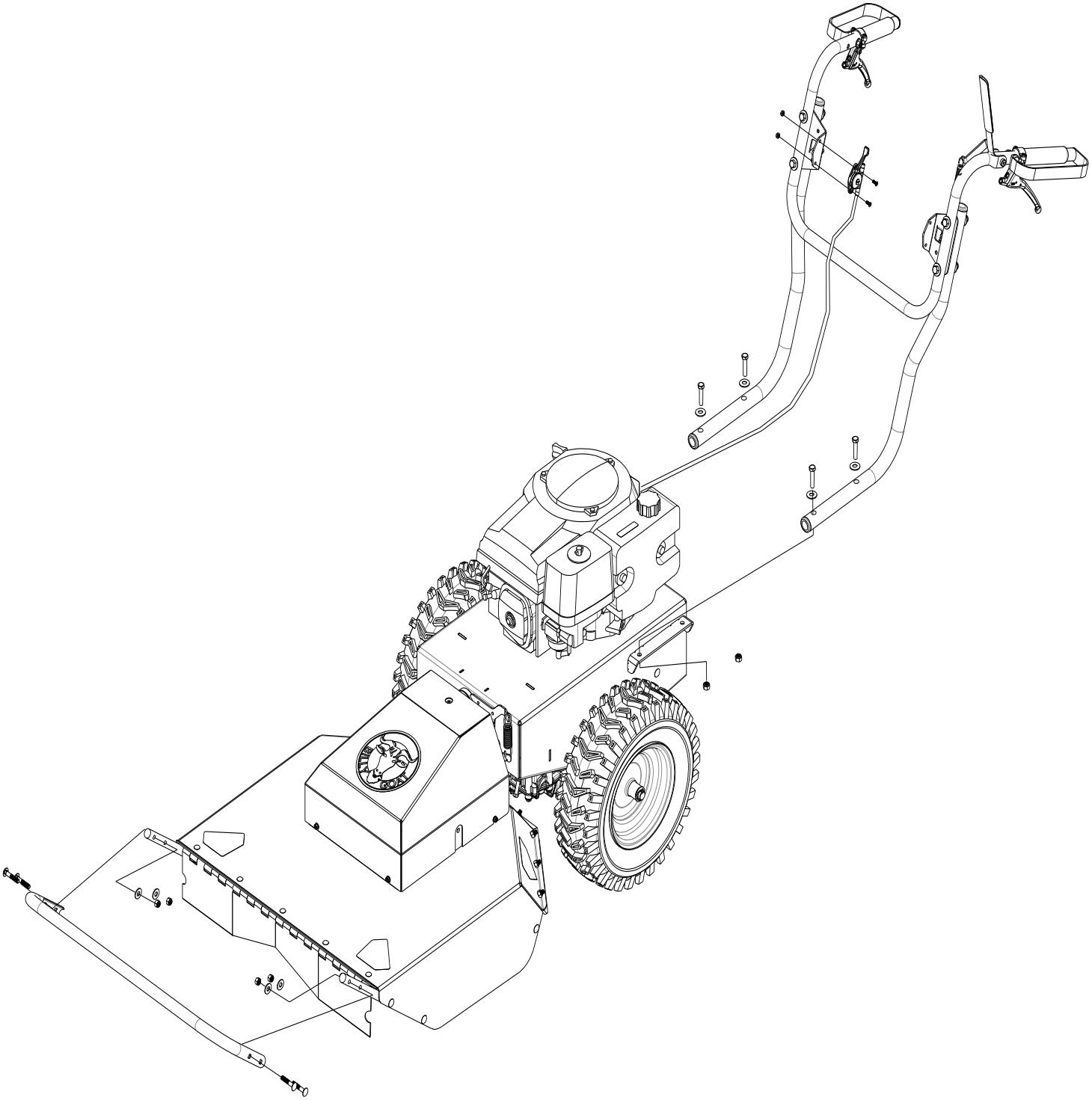

Brush Cutter Assembly Drawing

ASSEMBLY INSTRUCTIONS

Your BILLY GOAT ® *BC Self-Propelled Hydro Brush Cutter* was shipped in one carton, completely assembled except for the upper handle assembly and the front guard bar. Mounting hardware for the handle and guard bar is temporarily installed on the lower handle and the front of the deck assembly. The throttle cable hardware is located on the bracket on the right side of the handle

READ all safety instructions before assembling unit.

NOTE A CB18, C50, SC50 or MCB50 series dry or wet battery with a 17.2 Ah rating is required when replacing the battery.

NOTE Numbers in parenthesis ( ) refer to item numbers in the parts list.

1. Remove unit from carton. Make sure the following items that have been packed with unit:

- ☐ Upper Handle Assembly, P/N 501010, Electric model P/N 501009
- ☐ Guard Bar, P/N 501403
- ☐ Owner's Manual, P/N 501505
- ☐ General Safety and Warnings Manual 100296
- ☐ Honda or Briggs and Stratton Engine Manual
- ☐ Warranty Card, P/N 400972
- ☐ Ty-Wraps (4 ea)
- ☐ Screwcap 3/8" – 16 X 2" P/N 8041054 (qty 4)
- ☐ Washer 3/8" flat P/N 8171004 (qty 4)
- ☐ Nut Lock 3/8"-16 P/N 8160003 (qty 4)
- ☐ Nut lock #10-24 hex P/N 8164005 (qty 2)
- ☐ Screw machine flat HD Phil P/N 830514 (qty 2)
- ☐ Washer 5/16" flat P/N 8171003 (qty 4)
- ☐ Bolt carriage 5/16"-18 x 1 3/4" P/N 8024043 (qty 4)
- ☐ Nut Lock 5/18"-18 hex ZP P/N 8160002 (qty 4)
- ☐ Starter switch P/N 501286 (Electric start only)

WARNING: **DISCONNECT** spark plug wire before assembling unit.

2. Remove mounting hardware from the hardware bag.
3. Attach the handle to the engine base with the items 72, 73, and 48.
4. Tighten mounting hardware on handle braces (5 and 6).
5. Attach guard bar (16) to Skid bar by installing the side bolts into the top two holes on the skids with items 12, 9 and 8.
6. Attach the throttle (82) to the right hand bracket (70) using the hardware items 83 and 84. Tighten securely and make sure the cable isn't binding. FOR ELECTRIC START MODELS, Attach the throttle to the bracket then remove the starter switch (144) from the parts bag. Feed the wire harness (153) for the start switch into the box (143) through the bottom and attach the starter switch to it. Then press the switch into hole on the top of the box, making sure it is seated properly. (See parts illustration pg. 23 for assembly)
7. Attach the Blade drive cable to the lever and seat the plastic insert into the bracket on the left side of the handle
8. Secure the drive and blade cables with the ty-wraps provided
9. For electric start models secure the battery in the battery plate (141), hook one side of the strap (147) into the hole then stretch the strap across the top of the battery and hook the opposite side into the opposing hole on the plate. Make sure the battery will not move then connect terminals. Replacement hardware to attach the cables to the battery can be found at a local hardware store.
10. Reconnect spark plug wire.

OPERATION

OPERATOR CONTROLS

The operator's station is at the rear of the machine between the handlebars. The operator should STAND in a position to allow both handlebars to be grasped firmly and which allows sufficient leverage to steer the machine. Operator's controls are shown below.

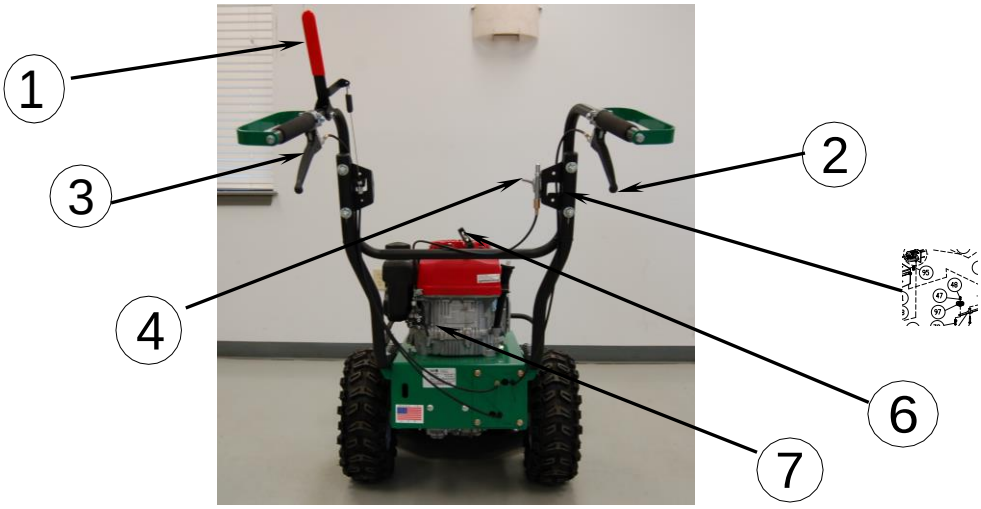

Operator Control Locations

1	Blade Clutch Lever	5	Start Switch (Electric only)
2	Forward Lever	6	Pull Starter
3	Reverse Lever	7	Choke
4	Throttle		

STARTING

CHECK engine oil level before operating machine.

1. Place equipment on a level, firm surface that is free of rocks or other debris.
2. Place throttle in Fast position.

Throttle

3. Pull choke out (Honda engine only).

Choke

4. Units equipped with electric starters: Turn the switch right until engine starts, only cranking over the engine for 10 sec at a time if it does not immediately start.

Start/Stop switch

WARNING: **DO NOT START** equipment with drive or blade clutch engaged.

5. Units equipped with manual starters: Pull starter rope to start engine.

WARNING: **PULL STARTER CORD** slowly until resistance is felt. Then pull cord rapidly to avoid kickback.

6. Push choke in (Honda engine only).
7. Pull throttle control back to and allow engine to reach correct operating speed.

CUTTING

The best performance is achieved when cutting in dry conditions. The quality of the cut is directly related to ground speed during cutting. Under most conditions cutting should be done at a slower ground speed. Fast speeds should be reserved for conditions where weeds and brush are thinned out or not very tall. If the quality of the cut is not satisfactory, attempt at slower speeds.

1. Press blade clutch handle down to engage blade. Allow blade to spin up to normal operating speed.

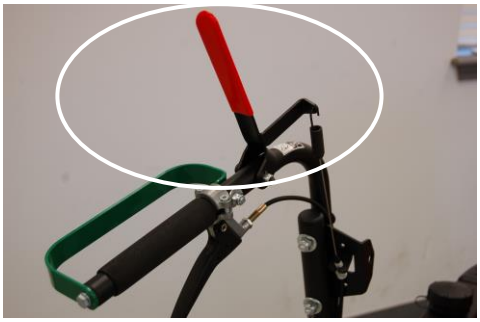

Blade Clutch Lever

2. Pull Forward or Reverse Drive lever up to engage transaxle in desired direction.

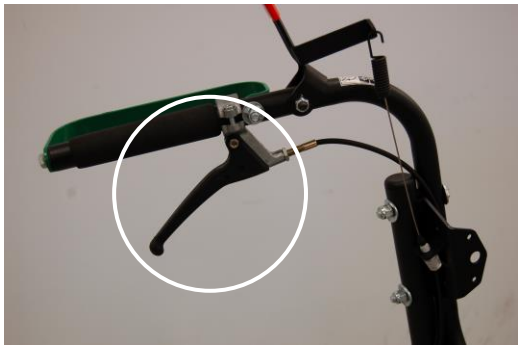

Reverse Drive Lever (left hand)

Forward Drive Lever (right hand)

SHUT DOWN

1. Release drive lever to disengage transaxle.
2. Release blade clutch handle to disengage blade.
3. (Non-Electric) Move the throttle to the slowest possible position on the throttle control.
4. (Electric models) Turn the key to the OFF position.

CLEARING A CLOGGED CUTTING DECK

WARNING: **DISCONNECT** spark plug wire before servicing unit.

1. Shut engine off and wait for blade to stop completely.
2. Disconnect spark plug wire.
3. Remove clog from cutting deck.

WEAR durable gloves. Clog may contain sharp materials.

4. Reconnect spark plug wire.

MAINTENANCE

PERIODIC MAINTENANCE

Periodic maintenance should be performed at the following intervals:

Maintenance Operation	Every Use	Daily or Every 5 Hours	Every 25 Hours	Every 50 Hours	Every 100-150 Hours
Inspect for worn or damaged parts.	●				
Check for excessive vibration		●			
Inspect for loose parts.		●			
Sharpen blade.			●		
Inspect belts for wear.			●		
Lubricate throttle control cable and linkage.			●		
Check blade clutch cable tension.				●	
Inspect battery for corrosion, damage or leaks (electric start units only).				●	
Apply anti-seize compound to rear axles.				●	
Check battery strap for excessive wear or rips	●				
Replace blade drive and transaxle drive belts.					●

COMMON REPLACEMENT PARTS

- Blade. P/N 501224. Original equipment replacement blade.
- Transaxle Drive Belt. P/N 501268. Original equipment replacement drive belt.
- Blade Drive Belt. P/N 501220. Original equipment replacement drive belt.
- Skid. P/N 501407. Side deck skid.
- Throttle Control Assembly. Throttle control including cable.

CLEANING

Your BILLY GOAT ® Brush Cutter should be cleaned periodically to ensure optimum performance and service life. Clogs and debris should be removed from the blade area and debris should be removed from the engine cooling fins. A garden hose or pressure washer may be used for cleaning.

CAUTION: **DO NOT SPRAY WATER DIRECTLY ON THE BLADE CLUTCH WHEN USING A POWER WASHER. SEE FIGURE BELOW.**

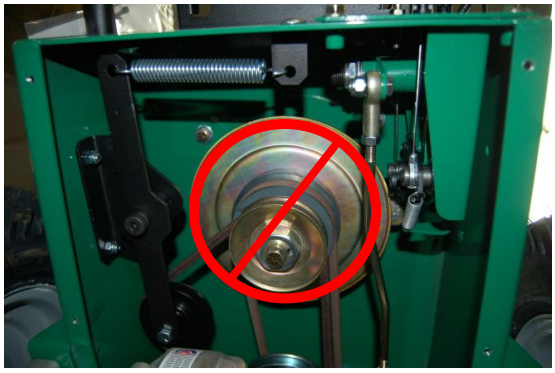

BLADE REMOVAL AND SHARPENING

READ all safety instructions before servicing unit.

NOTE Numbers in parenthesis (N) refers to the item number in Illustrated Parts List.

WARNING: **DISCONNECT** spark plug wire before servicing unit.

1. Disconnect spark plug wire.
2. Lift and support front of unit to allow access to underside.

   WARNING: **UNIT IS HEAVY**. Make sure support is adequate to support weight of machine.

3. Block blade to prevent it from rotating during removal.
4. Remove blade nut (23), and friction washer (39).
5. Remove blade (40) and install replacement blade.

   NOTE When replacing the blade use BILLY GOAT Industries PN 501224 only.

   NOTE When sharpening blade make sure to sharpen all cutting edges. If the lock nut is removed and replaced more than once, it should be replaced with a new lock nut (P/N 8160009).

6. Attach new blade with new blade lock nut (23), and new friction washer (39) removed earlier included with your new blade.

   NOTE Inspect fasteners for wear and replace if necessary.

7. Torque blade lock nut to 30-40 ft-lbs.
8. Reconnect spark plug wire.

Blade Drive Belt Tension

READ all safety instructions before servicing unit.

WARNING: **DISCONNECT** spark plug wire before servicing unit.

NOTE The Blade Drive belt is under constant tension by the idler arm on the deck

1. Disconnect spark plug wire.
2. Loosen four screws (27) holding belt deck cover (29) and remove the cover.
3. Examine condition of belt and amount of tension on belt.
4. If the idler is not providing enough tension inspect the spring (item 50) attaching it to the spindle base. If not enough tension is being put on the arm, replace the spring.
7. Replace engine base door (29) and secure with screws removed earlier.
8. Reconnect spark plug wire.
9. Check belt tension by operating unit under conditions that caused belt slippage. If belt continues to slip it may require replacement before operation may continue.

Blade Clutch Adjustment

READ all safety instructions before servicing unit.

WARNING: **DISCONNECT** spark plug wire before servicing unit.

1. Disconnect spark plug wire.
2. As the clutch/brake wears or begins slipping or squealing, adjustment may be required to maintain proper cable tension and clutch engagement. A properly adjusted blade clutch should require 10 lbs. of force to depress the end of the clutch lever. The blade clutch cable spring should stretch 1/4" to 3/8" (6.4-9.5 mm).
3. Adjust cable tension by tightening or loosening cable adjustment nut on rear of engine base (see below). Be sure to leave enough slack in cable to allow blade brake to engage.

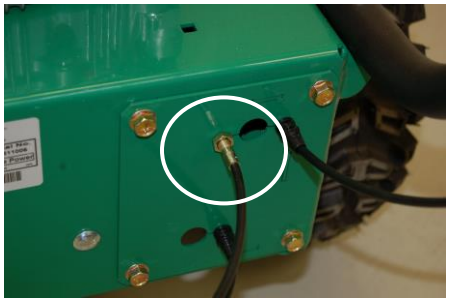

Blade Cable Adjustment

CAUTION: If clutch continues to slip or squeal, do not operate equipment until adequate adjustment or repair has been performed. Improper adjustment can cause clutch to overheat and slip, greatly reducing performance and clutch life.

4. Reconnect spark plug wire.

Transaxle Drive Belt Removal and Replacement

READ all safety instructions before servicing unit.

NOTE Numbers in parenthesis (N) refers to the item number in Illustrated Parts List.

WARNING: **DISCONNECT** spark plug wire before servicing unit.

1. Disconnect spark plug wire.
2. Lift and support the rear of the unit to allow access to the underside
3. Unattach the spring (item 50) from the bracket (item 98) that is keeping tension on the drive belt.
4. Walk the belt (item 121) off of the clutch (item 54) by slowly pulling the engine over. **WARNING:** use caution not to pinch fingers between the belt and clutch.
5. Slip the belt off of the transaxle pulley.
6. Replace the belt in reverse order. **NOTE:** make sure the belt is seated properly in the clutch and transaxle and make sure that it does not bend over the fan blades on the transaxle.

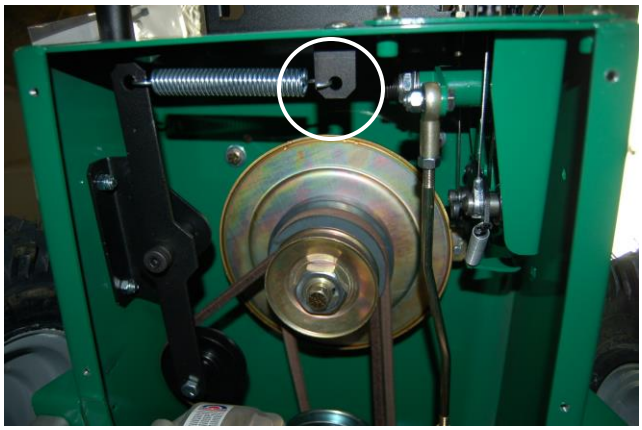

Blade Drive Belt Removal and Replacement

READ all safety instructions before servicing unit.

WARNING: **DISCONNECT** spark plug wire before servicing unit.

1. Disconnect spark plug wire.
2. Lift and support rear of unit to allow access to underside.

WARNING: **UNIT IS HEAVY**. Make sure support is adequate to support weight of machine.

3. Loosen the four screws (27) holding deck belt cover (29) and remove cover.
4. Follow the steps 3 and 4 in the Transaxle drive belt removal section to remove the Transaxle drive belt.

NOTE It may be necessary to pry idler pulley (35) away from its original position to release belt, using a ratchet with an extension in the square hole on the idler arm should allow the proper leverage to pull it off the belt.

5. Relieve the tension on the blade belt by pulling the deck idler arm off of the belt. Then walk the belt off of the deck pulley.
6. Feed the belt back to the engine base then slip the belt off of the clutch.
7. Install the new belt in reverse order making sure the belt is seated properly in the clutch.

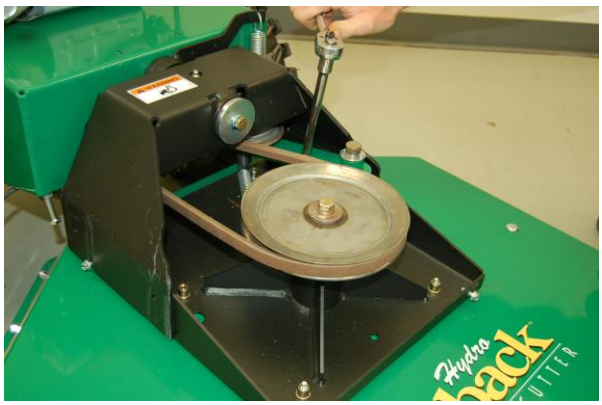

Removing tension on the blade belt

8. Reconnect spark plug wire.

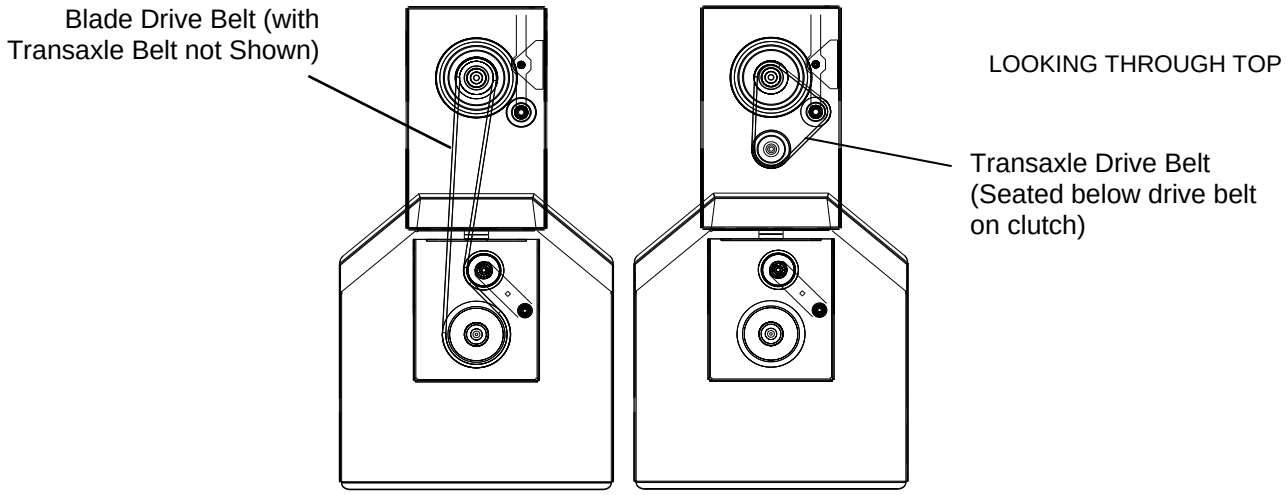

Belt Routing Diagram
(Top View of Machine)

TRANSAXLE DRIVE ADJUSTMENT

READ all safety instructions before servicing unit.

WARNING: **DISCONNECT** spark plug wire before servicing unit.

1. Disconnect spark plug wire.
2. Adjustments to cable tension are made at the barrel entering the Drive Control Levers.
3. Adjust cable tension by tightening or loosening cable adjustment barrel on rear of engine base (see below).

NOTE Moving the cable adjustment barrel OUT increases tension. Moving the barrel IN decreases tension. Increasing the tension too much will cause the drive to stay engaged whereas not enough will cause it not to engage when the lever is pulled.

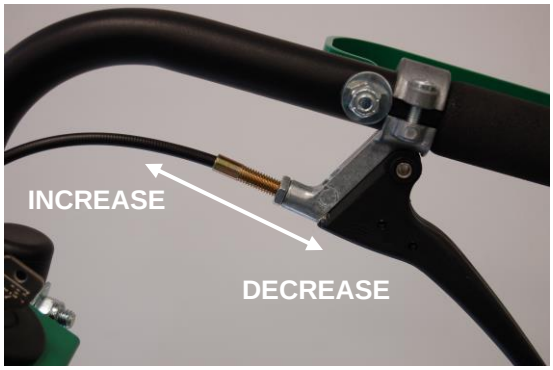

Transaxle Cable Adjustment

4. Reconnect spark plug wire.

WIRING DIAGRAMS

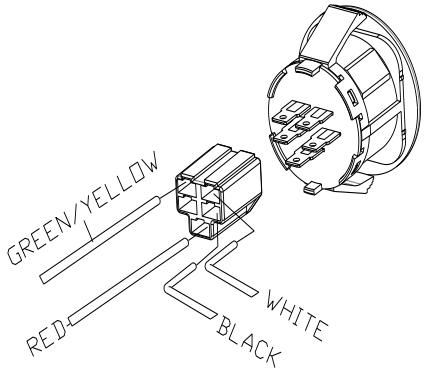

Starter Switch Wiring

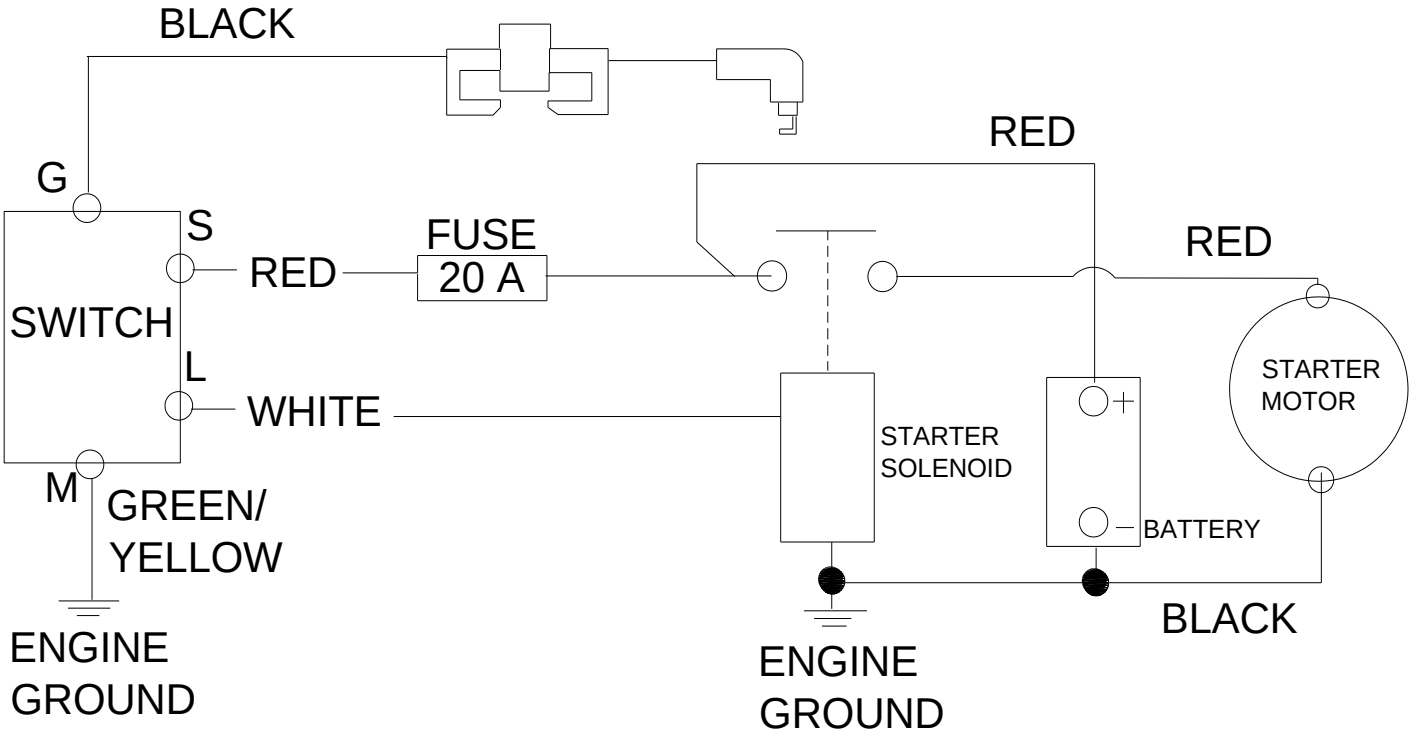

Starter Circuit Schematic Diagram

Battery Care (For Electric-Starting Models)

Proper care can extend the life of a battery. Follow these recommendations to ensure your battery's best performance and long life:

• Do not allow the battery charge to get too low. If the machine is not used, charge the battery every 4 – 6 weeks. Operate the engine for at least 45 minutes to maintain proper battery charge.

• Store an unused battery in a dry area that does not freeze.

• Do not charge an already charged battery. In theory, you cannot overcharge our battery with a trickle charger; however, when a battery is fully charged and the charger is still on, it generates heat that could be harmful to the battery. A fully charged battery will read 12V-13.2V with a voltmeter.

• Do not continue to crank your engine when the battery charge is low.

Charging the Battery

Operate the engine for at least 45 minutes to maintain proper battery charge. If the battery loses its charge, you will need to use a trickle charger to recharge it. **Caution**: The charger should have an output of 12 volts at no more than 2 amps. Using a charger with higher amps will cause significant damage to the battery.

• At 1 amp, the battery may need charging for as long as 48 hours.

• At 2 amps, the battery may need charging for as long as 24 hours.

***NOTE*:** *Using the Recoil Starter and then running the engine will not recharge a dead or significantly discharged battery.*

WHEN YOU ARE FINISHED CHARGING THE BATTERY, DISCONNECT THE CHARGER FROM THE OUTLET FIRST, THEN DISCONNECT THE BATTERY CHARGER WIRES FROM THE BATTERY. IF YOU LEAVE THE BATTERY CHARGER WIRES CONNECTED TO THE BATTERY, THE BATTERY WILL DISCHARGE ITSELF BACK INTO THE CHARGER.

TROUBLESHOOTING

Problem	Possible Cause	Corrective Action
Engine will not start.	Throttle is set to Slow/Stop position.	Move throttle to fast position.
	Out of gasoline.	Fill gas tank.
	Old or contaminated gasoline.	Drain gas tank and fill with fresh gasoline.
	Spark plug wire disconnected.	Connect spark plug wire.
	Dirty air cleaner.	Clean or replace air cleaner.
Starter does not turn. (Electric start only)	Battery low or dead.	Charge or replace battery.
	Battery cable disconnected or corroded.	Clean and secure battery terminals.
	Defective starter switch or wiring harness.	Replace starter switch or wiring harness.
	Defective starter.	Replace starter.
Will not cut or cutting performance is poor.	Blade drive cable tension incorrect.	Adjust blade drive cable tension.
	Dull blade.	Sharpen or replace blade.
	Clogged deck.	Unclog deck.
	Excessive debris built up on or blocking blade.	Clear debris from blade area.
	Engine RPM set too low.	Check engine RPM.
Abnormal vibrations.	Blade loose or out of balance.	Check blade for tightness. Rebalance if necessary.
	Engine loose.	Check engine mounting bolts.
	Blade drive belt worn.	Replace blade drive belt.
Belt slips or smokes.	Belt tension too low.	Adjust belt tension.
	Belt worn or stretched.	Replace belt.
	Pulleys worn or damaged.	Replace pulleys.
Clutch slips or squeals.	Clutch cable tension too low.	Replace spring on idler arm.
	Clutch worn or damaged.	Replace worn or defective clutch assembly parts.
Blade brake will not engage.	Inadequate slack in clutch cable.	Adjust clutch cable.
	Clutch worn or damaged.	Replace clutch/brake assembly.
Transaxle will not engage.	Clutch lever not engaging clutch.	Adjust clutch cable.
	Clutch cable defective.	Replace cable.
	Belt worn or broken.	Replace belt.
Transaxle will not disengage.	Clutch cable out of adjustment.	Adjust clutch cable.
Engine will not turn over.	Defective blade clutch.	Replace clutch.
	Engine problem.	Contact an authorized servicing dealer for your engine.

ILLUSTRATED PARTS LIST

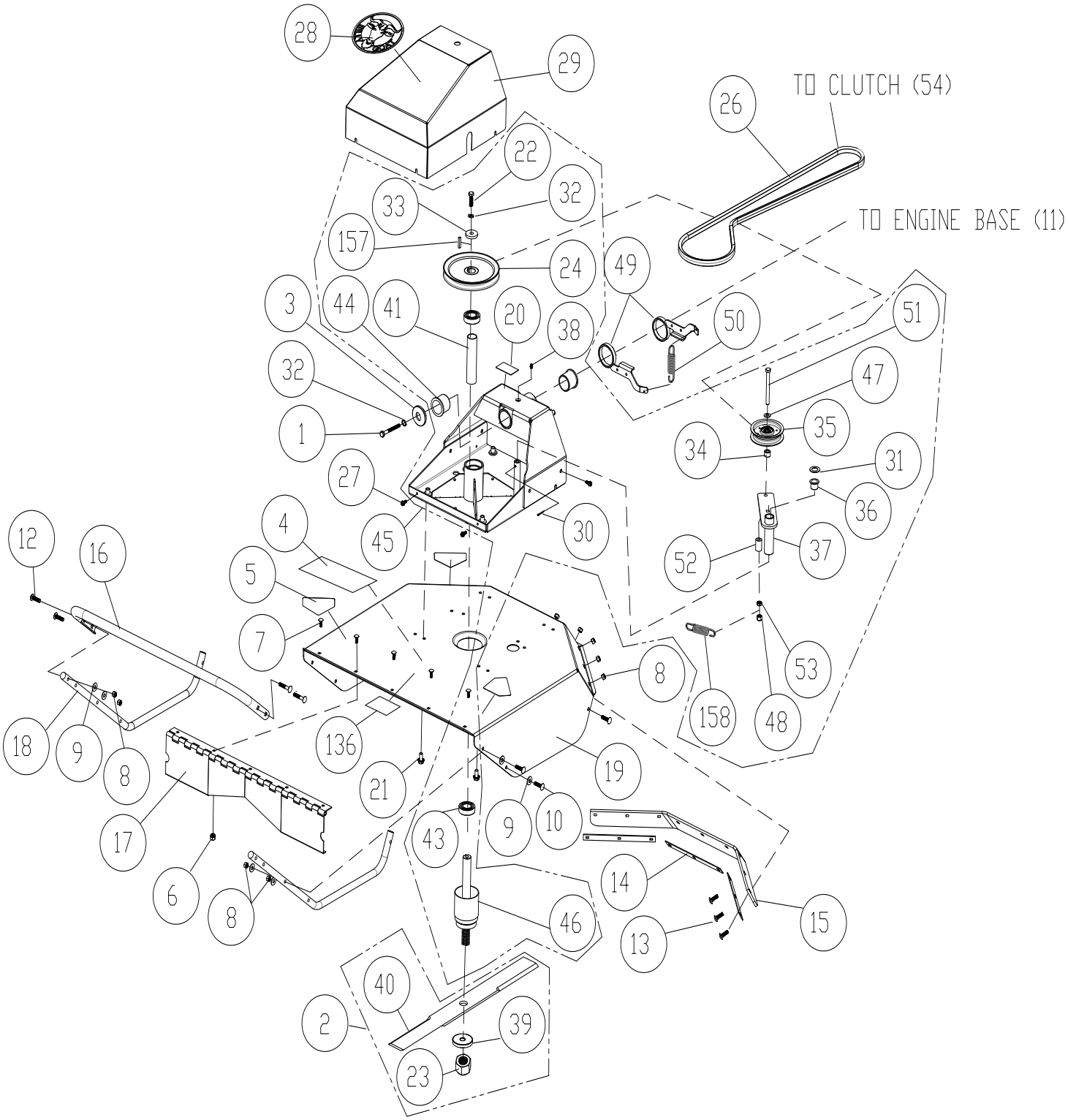

Deck Assembly

ITEM NO	DESCRIPTION	BC2600HEBH		BC2600HH		BC2600ICH	
		Part No	QTY	Part No	QTY	Part No	QTY
1	SCREWCAP 3/8-24 X 1" HCS GR. 8	900154	1	900154	1	900154	1
2	BLADE KIT BC26	501601	1	501601	1	501601	1
3	WASHER DECK RETAINNG	501214	1	501214	1	501214	1
4	LABEL BADGING BC26 HYDRO	501500	1	501500	1	501500	1
5	LABEL DANGER	400424	4	400424	4	400424	4
6	NUT LOCK 1/4-20 ZP	8160001	5	8160001	5	8160001	5
7	BOLT CARRIAGE 1/4-20 X 3/4" HCS ZP	8024021	5	8024021	5	8024021	5
8	NUT LOCK 5/16-18 ZP	8160002	19	8160002	19	8160002	19
9	WASHER 5/16 FLAT	8171003	16	8171003	16	8171003	16
10	SCREWCAP 5/16"-18 X 1 1/2 HCS ZP	8041030	6	8041030	6	8041030	6
12	CARRIAGE BOLT 5/16"-18 X 1 3/4"	8024043	4	8024043	4	8024043	4
13	CARRIAGE BOLT 5/16"-18 X 1"	8024040	9	8024040	9	8024040	9
14	PLATE CLAMP SKIRTING BC26	501239	3	501239	3	501239	3
15	DEFLECTOR RUBBER	501231	1	501231	1	501231	1
16	BAR GUARD BC26	501403	1	501403	1	501403	1
17	HINGE DEFLECTOR BC26	501211	1	501211	1	501211	1
18	SKID BC26	501407	2	501407	2	501407	2
19	DECK BC26 WA W/LABELS	501600	1	501600	1	501600	1
20	LABEL DANGER GUARD	900327	1	900327	1	900327	1
21	SCREW SER HEX WASHER FLNG	791080	6	791080	6	791080	6
22	SCREWCAP 3/8"-16 X 1 1/4" HCS ZP	8041051	1	8041051	1	8041051	1
23	NUT LOCK NYLON INSERT 5/8"-18 GR 2	8160009	1	8160009	1	8160009	1
24	PULLEY 7" OD X 1.000 BORE	501308	1	501308	1	501308	1
26	BELT 6972 POWERATED	501220	1	501220	1	501220	1
27	SCREW SELT TAP 1/4-20 X 5/8" HWH TYPE F	890359	4	890359	4	890359	4
28	LABEL PRODUCT DECAL LG CIRCLE	430303	1	430303	1	430303	1
29	COVER BELT DECK WA BC26 W/LABEL	501602	1	501602	1	501602	1
30	PIN COTTER 1/8" X 1"	8197031	1	8197031	1	8197031	1
31	WASHER .765 ID X 1.25 OD X .06 THK	850238	1	850238	1	850238	1
32	WASHER LOCK 3/8 S/T MED	8177012	1	8177012	1	8177012	1
33	WASHER 1.5 OD X .453 ID X .25 THK	440153	1	440153	1	440153	1
34	TUBE PIVOT IDLER VQ	830526	1	830526	1	830526	1
35	PULLEY IDLER 4.00 OD X 3/8" BORE	500113	1	500113	1	500113	1
36	BUSHING PIVOT FRAME AE	360183	1	360183	1	360183	1
37	ARM IDLER DECK WA BC	501103	1	501103	1	501103	1
38	ZERK FITTING GREASE	610363	1	610363	1	610363	1
39	WASHER FRICTION BLADE	501305	1	501305	1	501305	1
40	BLADE 26" FLAT BC26	501224	1	501224	1	501224	1
41	SPACER SPINDLE BEARING BC26	501245	1	501245	1	501245	1
43	BEARING 1.00" SEALED PRESS IN	501302	2	501302	2	501302	2
44	BUSHING 1.500 ID X 1.5 LONG FLANGED	501217	2	501217	2	501217	2
45	BRACKET DECK MOUNT WA BC26 W/LABEL	501604	1	501604	1	501604	1
46	SHAFT BLADE ADAPTER ASSY	501027	1	501027	1	501027	1
47	WASHER 3/8" SAE	8172009	1	8172009	1	8172009	1
48	NUT LOCK 3/8-16 HEX	8160003	1	8160003	1	8160003	1
49	ARM RTN WA BC26	501116	2	501116	2	501116	2
50	SPRING LIFT ASSIST TENSION	351254	2	351254	2	351254	2
51	SCREWCAP 3/8"-16 X 3 3/4" HCS ZP	8041061	1	8041061	1	8041061	1
52	BUSHING PIVOT LIFT	360138	1	360138	1	360138	1
53	NUT LOCK 3/8"-16 LT WT TH ZP	8161042	1	8161042	1	8161042	1
136	LABEL WARNING FLYING DEBRIS	810736	1	810736	1	810736	1
157	KEY 1/4 SQ. X 0.75"	9201109	1	9201109	1	9201109	1
158	SPRING IDLER BC	501261	1	501261	1	501261	1

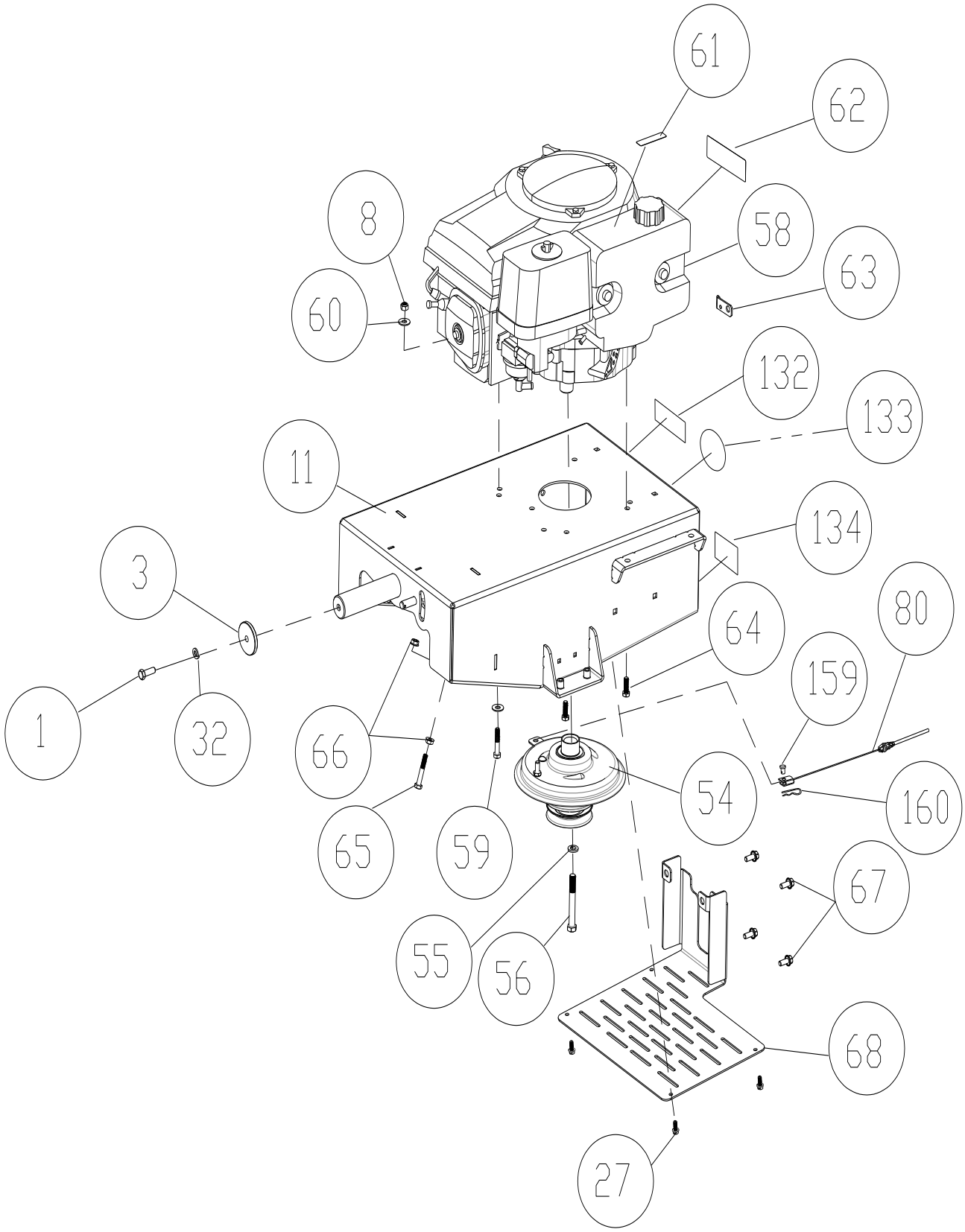

Engine Assembly

ITEM NO	DESCRIPTION	BC2600HEBH		BC2600HH		BC2600ICH	
		Part No	QTY	Part No	QTY	Part No	QTY
1	SCREWCAP 3/8-24 X 1" HCS GR. 8	900154	1	900154	1	900154	1
3	WASHER DECK RETAINING	501214	1	501214	1	501214	1
8	NUT LOCK 5/16"-18 ZP	8160002	2	8160002	2	8160002	2
11	ENGINE BASE WA W/LABELS	501603	1	501603	1	501603	1
27	SCREW SELT TAP 1/4-20 X 5/8" HWH TYPE F	890359	4	890359	4	890359	4
32	WASHER LOCK 3/8" S/T MED	8177012	1	8177012	1	8177012	1
54	CLUTCH	501223	1	501223	1	501223	1
55	WASHER LOCK S/T MED	8177013	1	8177013	1	8177013	1
56	SCREWCAP 7/16"-20 X 3 1/2" GR 8 W/PATCH	440150	1	440150	1	440150	1
58	ENGINE HONDA ELEC START	500333	1	-	-	-	-
	ENGINE BRIGGS	-	-	-	-	520046	1
	ENGINE HONDA	-	-	500334	1	-	-
59	SCREWCAP 5/16"-18 X 1 3/4 HCS ZP	8041031	2	8041031	2	8041031	2
60	WASHER 5/16" FLAT	8171003	4	8171003	4	8171003	4
61	LABEL WARNING FUEL	100261	1	100261	1	100261	1
62	LABEL SPARK ARRESTOR	100256	1	100256	1	100256	1
63	PLATE CHOKE BC26	500325	1	500325	1	-	-
64	SCREWCAP 5/16-24 X 1" GR 8 ZP W/PATCH	400164	2	400164	2	400164	2
65	SCREWCAP 5/16"-18 X 2" HCS ZP	8041032	2	8041032	2	8041032	2
66	NUT FLANGE 5/16"-18 ZP	350346	4	350346	4	350346	4
67	SCREW SER HEX WSHR FLNG 5/16-18 X 3/4"	351264	4	351264	4	351264	4
68	GUARD REAR HYDRO BC26	501295	1	501295	1	501295	1
80	CABLE CLUTCH	501279	1	501279	1	501279	1
132	LABEL MADE IN USA	520116	1	520116	1	520116	1
133	LABEL READ MANUAL	890301	1	890301	1	890301	1
134	LABEL EAR EYE PROTECTION	890254	1	890254	1	890254	1
159	PIN CLEVIS 0.25 X 0.050	440124	1	440124	1	440124	1
160	PIN HITCH CLIP 0.051 X 3/4	440193	1	440193	1	440193	1

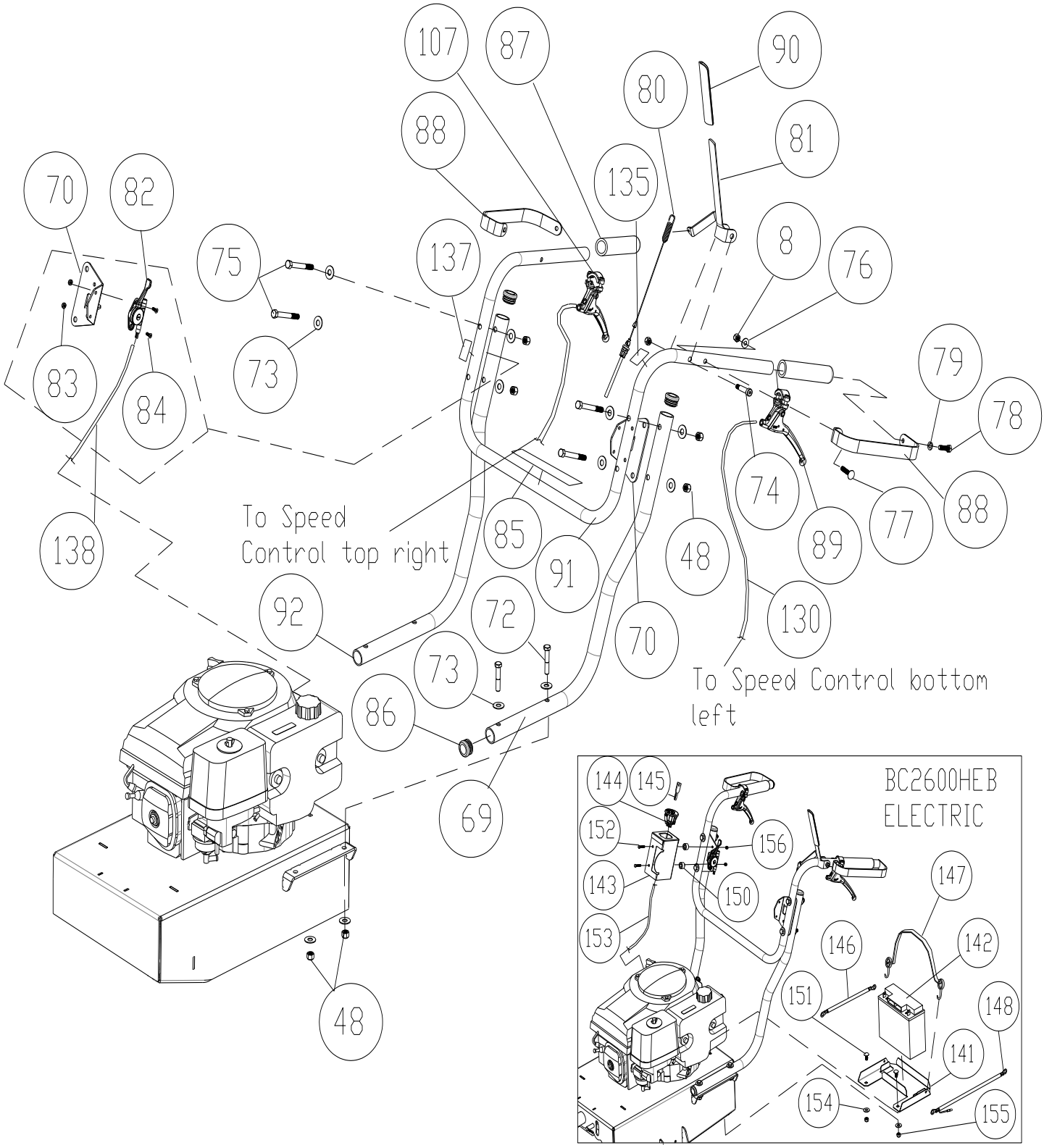

Handle Assembly

ITEM NO	DESCRIPTION	BC2600HEBH		BC2600HH		BC2600ICH	
		Part No	QTY	Part No	QTY	Part No	QTY
8	NUT LOCK 5/16-18 ZP	8160002	3	8160002	3	8160002	3
48	NUT LOCK 3/8-16 HEX	8160003	8	8160003	8	8160003	8
69	HANDLE LOWER LEFT	501400	1	501400	1	501400	1
70	BRACKET THROTTLE BC26	501251	2	501251	2	501251	2
72	SCREWCAP 3/8"-16 X 2"	8041054	4	8041054	4	8041054	4
73	WASHER 3/8" FLAT	8171004	16	8171004	16	8171004	16
74	BOLT SHOULDER 3/8"-16 X 1 1/2"	501313	1	501313	1	501313	1
75	SCREWCAP 3/8"-16 X 3" HCS ZP	8041058	4	8041058	4	8041058	4
76	WASHER 1/4" FLAT	8171002	2	8171002	2	8171002	2
77	BOLT CARRIAGE 5/16"-18 X 1 1/2" ZP	8024042	2	8024042	2	8024042	2
78	SCREWCAP 5/16"-18 X 1" ZP	8041028	2	8041028	2	8041028	2
79	WASHER LOCK 5/16" S/T MED	8177011	2	8177011	2	8177011	2
80	CABLE CLUTCH	501279	1	501279	1	501279	1
81	LEVER CONTROL BLADE	500312	1	500312	1	500312	1
82	CONTROL THROTTLE	440013	1	440013	1	440013	1
83	NUT LOCK LT #10-24 HEX	8164005	2	8164005	2	8164005	2
84	SCREW MACHINE FLAT HD PHIL #10-24	830514	2	830514	2	830514	2
85	LABEL DRIVE DIRECTION	501502	1	501502	1	501502	1
86	PLUG TUBE INSERT 1.25" OD	791056	4	791056	4	791056	4
87	GRIP HANDLE	500267	2	500267	2	500267	2
88	GUARD HAND BC26	501215	2	501215	2	501215	2
89	CONTROL MAGURA	351209	2	351209	2	351209	2
90	GRIP LEVER 0.125" X 1" X 5" RED	500379	1	500379	1	500379	1
91	HANDLE UPPER	501402	1	501402	1	501402	1
92	HANDLE LOWER RIGHT	501401	1	501401	1	501401	1
107	CABLE SPEED CONTROL RT	501276	1	501276	1	501276	1
130	CABLE SPEED CONTROL LFT	351271	1	351271	1	351271	1
135	LABEL BLADE ENGAGE	500177	1	500177	1	500177	1
137	LABEL THROTTLE	810656	1	-	-	-	-
	LABEL THROTTLE PULL START BC	-	-	501314	1	501314	1
138	CABLE THROTTLE	440178	1	440014	1	440014	1
141	BATTERY BRACKET REAR BC	500347	1	-	-	-	-
142	BATTERY 12V W/LABEL	520200	1	-	-	-	-
143	BOX THROTTLE CONTROL	501250	1	-	-	-	-
144	SWITCH IGNITION	501286	1	-	-	-	-
145	DELTA KEY REPLACEMENT	501286-S	1	-	-	-	-
146	CABLE BATTERY BLACK 10"	790133	1				
147	BUNGEE CORD BLACK 9" STRAP 79	790303	1	-	-	-	-
148	CABLE BATTERY POSITIVE BC26	501222	1	-	-	-	-
150	TUBE PIVOT IDLER VQ	830526	2	-	-	-	-
151	BOLT CARRIAGE 5/16"-18 X 3/4" ZP	8024039	2	-	-	-	-
152	SCREWCAP 1/4"-20 X 1" HCS ZP	8041006	2	-	-	-	-
153	HARNESS WIRING BC26	501219	1	-	-	-	-
154	WASHER 5/16" FLAT ZP	8171003	2	-	-	-	-
155	NUT LOCK 5/16"-18 HEX ZP	8160002	2	-	-	-	-
156	NUT LOCK 1/4"-20 HEX	8160001	2	-	-	-	-

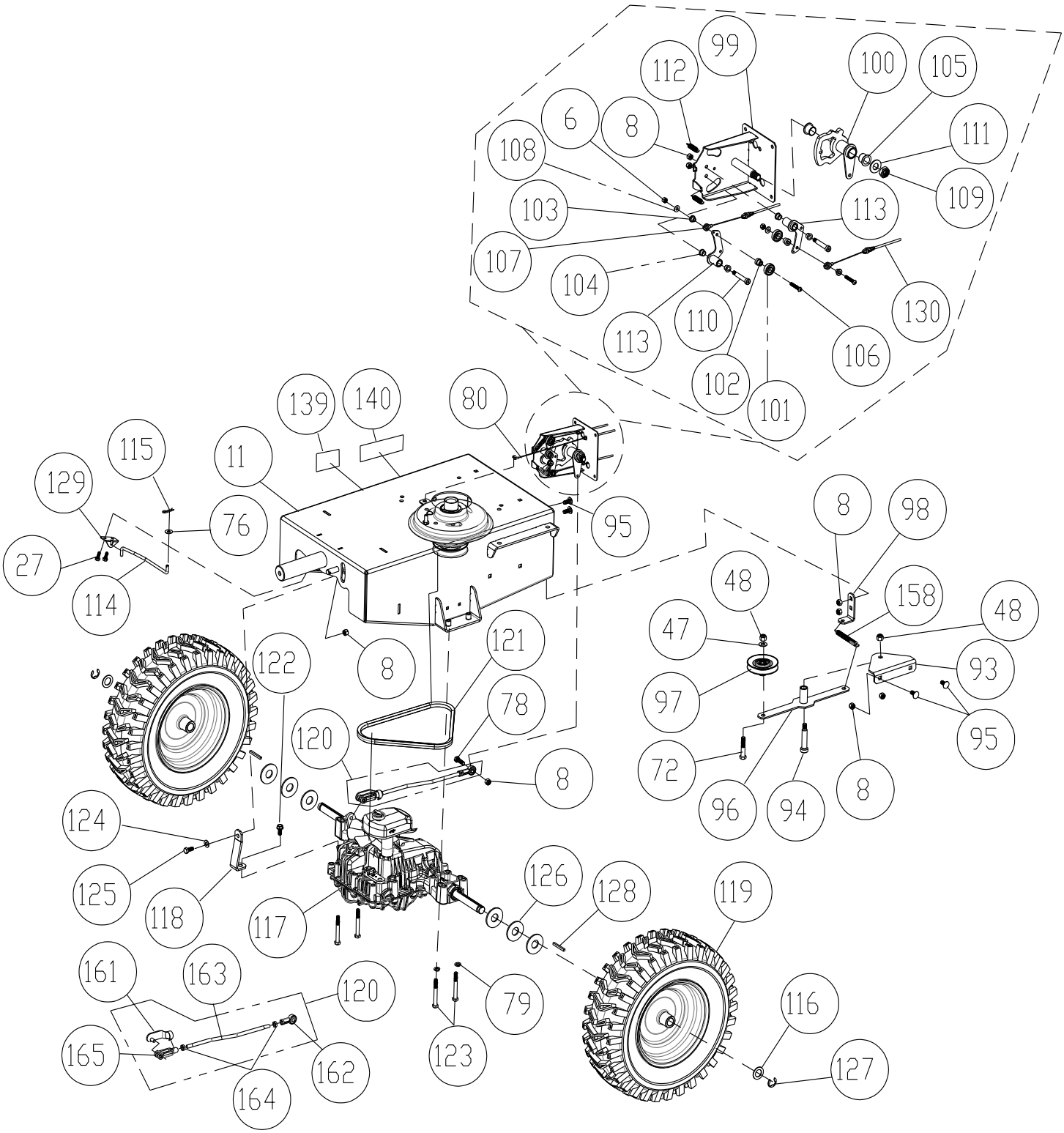

Transaxle Drawing

ITEM NO	DESCRIPTION	BC2600HEBH		BC2600HH		BC2600ICH	
		Part No	QTY	Part No	QTY	Part No	QTY
6	NUT LOCK 1/4"-20 HEX ZP	8160001	2	8160001	2	8160001	2
8	NUT LOCK 5/16"-18	8160002	10	8160002	10	8160002	10
11	ENGINE BASE WA W/LABELS	501603	1	501603	1	501603	1
27	SCREW SELT TAP 1/4-20 X 5/8" HWH TYPE F	890359	2	890359	2	890359	2
47	WASHER 3/8" SAE	8172009	1	8172009	1	8172009	1
48	NUT LOCK 3/8"-16 HEX	8160003	2	8160003	2	8160003	2
72	SCREWCAP 3/8"-16 X 2" HCS ZP	8041054	1	8041054	1	8041054	1
76	WASHER 1/4" SAE	8172007	1	8172007	1	8172007	1
78	SCREWCAP 5/16"-18 X 1" HCS ZP	8041028	1	8041028	1	8041028	1
79	WASHER LOCK 5/16" S/T MED	8177011	4	8177011	4	8177011	4
80	CABLE CLUTCH	501279	1	501279	1	501279	1
93	BRACKET IDLER ARM HYDRO BC26	501269	1	501269	1	501269	1
94	BOLT SHOULDER 1/2" X 2"	520031	1	520031	1	520031	1
95	BOLT CARRIAGE 5/16"-18 X 3/4" PLAIN	9024039	4	9024039	4	9024039	4
96	ARM IDLER DRIVE HYDRO BC26 WA	501112	1	501112	1	501112	1
97	PULLEY INSIDE IDLER BC26	501216	1	501216	1	501216	1
98	BRACKET SPRING IDLER	501297	1	501297	1	501297	1
99	BRACKET SPEED CONTROL BC26	501105	1	501105	1	501105	1
100	PLATE CAM SPEED CONTROL BC26	351110	1	351110	1	351110	1
101	BEARING 1/2" ID X 1.125" OD	351257	2	351257	2	351257	2
102	SPACER STEPPED SPEED CONTROL HYDRO DR	351255	2	351255	2	351255	2
103	SPACER EYELET SPEED CONTROL	351256	2	351256	2	351256	2
104	BUSHING 3/8" ID 1/2" OD X 3/8" LONG	840078	4	840078	4	840078	4
105	BUSHING PIVOT FRAME AE	360183	2	360183	2	360183	2
106	SCREWCAP 1/4-20 X 1 3/4 SKT BUT HD	840199	2	840199	2	840199	2
107	CABLE SPEED CONTROL RT	501276	1	501276	1	501276	1
108	WASHER 1/4" SAE	8172007	2	8172007	2	8172007	2
109	NUT LOCK 5/8"-11 LT WT TH ZP	8161046	1	8161046	1	8161046	1
110	BOLT SHOULDER 3/8" X 1 3/4"	351258	2	351258	2	351258	2
111	WASHER 5/8" FLAT	8172013	1	8172013	1	8172013	1
112	SPRING TENSION	800242	2	800242	2	800242	2
113	BELLCRANK SPEED CONTROL BC26	501114	2	501114	2	501114	2
114	ROD TRANS BYPASS BC26	501265	1	501265	1	501265	1
115	HAIR PIN COTTER 1/4"	900471	1	900471	1	900471	1
116	WASHER .765 ID X 1.25" OD X .06	850238	2	850238	2	850238	2
117	TRANSAXLE TUFF TORQ BC26	501218	1	501218	1	501218	1
118	BRACKET SUPPORT HYDRO TRANSAXLE	501267	1	501267	1	501267	1
119	TIRE 16" AG SP	501275	2	501275	2	501275	2
120	TRANS ROD ASSY	501025	1	501025	1	501025	1
121	BELT HYDRO TRANSAXLE BC26	501268	1	501268	1	501268	1
122	SCREW SELF TAP 5/16" X 3/4" HEX	8123128	1	8123128	1	8123128	1
123	SCREWCAP 5/16"-18 X 2 3/4" HCS ZP	8041035	4	8041035	4	8041035	4
124	WASHER 5/16" SAE	8172008	1	8172008	1	8172008	1
125	SCREWCAP 5/16"-18 X 3/4" HCS ZP	8041026	1	8041026	1	8041026	1
126	WASHER 3/4" SAE	8172015	6	8172015	6	8172015	6
127	RING RETAINING E 3/4"	850230	2	850230	2	850230	2
128	KEY 3/16" SQ X 2 1/8"	9201087	2	9201087	2	9201087	2
129	BRACKET BYPASS ROD	501272	1	501272	1	501272	1
130	CABLE SPEED CONTROL LFT	351271	1	351271	1	351271	1
139	LABEL DRIVE RELEASE	501504	1	501504	1	501504	1
140	LABEL CHOCK WHEELS	500168	2	500168	2	500168	2
158	SPRING IDLER BC	501261	1	501261	1	501261	1
161	SPRING PIN CONTROL ROD	501262	1	501262	1	501262	1
162	SPHERICAL ROD END MSF-5	351278	1	351278	1	351278	1
163	CONTROL ROD	501260	1	501260	1	501260	1
164	NUT JAM 5/16" NC	8143002	2	8143002	2	8143002	2
165	YOKE FEMALE STEEL 5/16" – 24 RH X 2.25"	501274	1	501274	1	501274	1